Rewarding Learning

Centre Number

Candidate Number

General Certificate of Secondary Education
2025

Technology and Design

Unit 2
Option A:
Electronic and Microelectronic
Control Systems

[GTY21]

GTY21

WEDNESDAY 11 JUNE, MORNING

TIME

1 hour 30 minutes.

INSTRUCTIONS TO CANDIDATES

Write your Centre Number and Candidate Number in the spaces provided at the top of this page.
You must answer the questions in the spaces provided.
Do not write outside the boxed area on each page or on blank pages.
Questions which require drawing or sketching should be completed using an HB pencil.
All other questions must be completed using black ink only.
Do not write in pencil or with a gel pen.
Answer **both** questions.

INFORMATION FOR CANDIDATES

The total mark for this paper is 100.
Quality of written communication will be assessed in Question **1(d)**.
Figures in brackets printed down the right-hand side of pages indicate the marks awarded to each question or part question.
The Formula sheet is on page 3.

14800

20GTY2101

BLANK PAGE

DO NOT WRITE ON THIS PAGE

(Questions start on page 4)

Formulae for GCSE Technology and Design

You should use, where appropriate, the formulae given below when answering questions which include calculations.

1 Potential Difference = current × resistance ($V = I \times R$)

2 For potential divider $V_{out} = \frac{R_2}{(R_1 + R_2)} \times V_{in}$

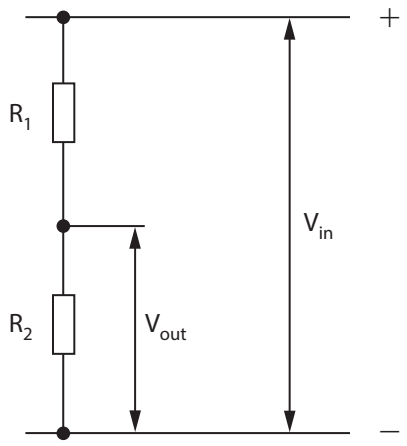

3 Series Resistors $R_t = R_1 + R_2 + ... + R_n$

4 Parallel Resistors $\frac{1}{R_t} = \frac{1}{R_1} + \frac{1}{R_2}$ *or* $R_t = \frac{R_1 \times R_2}{R_1 + R_2}$

5 Time Constant $T = R \times C$

6 Period $T = \frac{1}{f}$

7 Frequency (Hz) $f = \frac{1.44}{(R_1 + 2R_2)C}$ for the output of an astable circuit using a 555 timer

8 Time $T = 1.1 \times C \times R$ for the output of a monostable circuit using a 555 timer

[Turn over

Answer **all** questions

1 Four electronic symbols, labelled **A**, **B**, **C** and **D** are shown in **Fig. 1**.

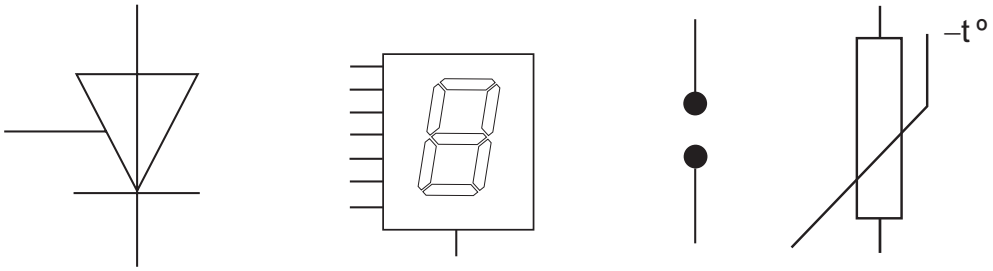

Source: CCEA

Fig. 1

(a) (i) Name the electronic component represented by each symbol shown in **Fig. 1** and state if it is an input, process or output component.

A _____

Input, process or output? _____ [2]

B _____

Input, process or output? _____ [2]

C _____

Input, process or output? _____ [2]

D _____

Input, process or output? _____ [2]

(ii) Explain the meaning of the term "feedback" when used in a control system.

_____

_____

_____ [2]

(b) **Fig. 2** shows a potential divider circuit.

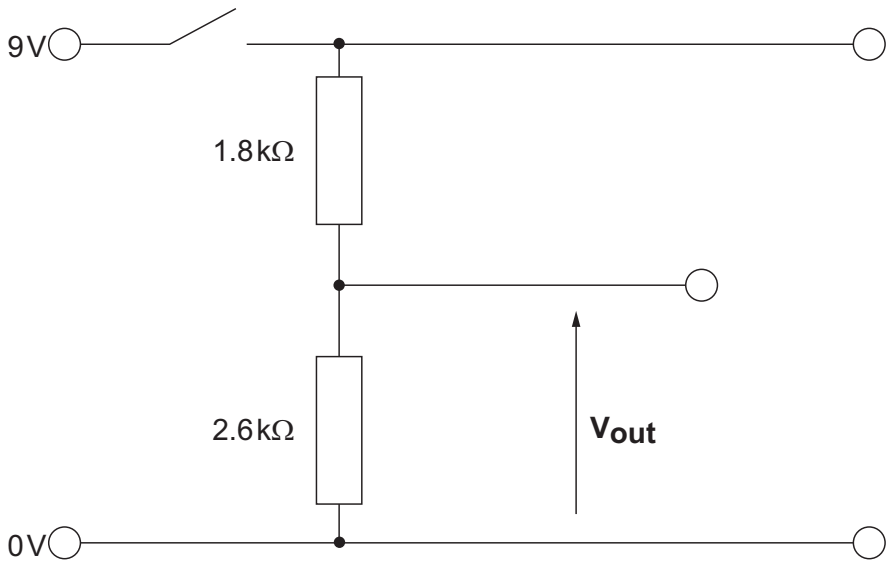

Source: CCEA

Fig. 2

(i) Calculate the expected voltage output $\mathbf{V_{out}}$, when the circuit is switched on.

Candidates need to show their working out in the space below.

Answer _____ [4]

[Turn over

Fig.3 shows a circuit diagram which is to be used in a student project.

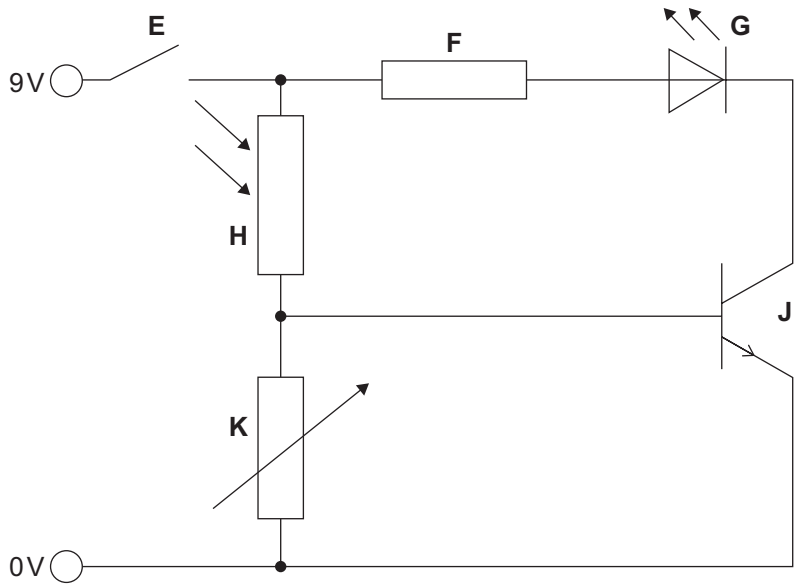

Source: CCEA

Fig. 3

(ii) Name the electronic component represented by the symbol labelled **K** in **Fig. 3**.

_____ [1]

(iii) Explain the purpose of component **F** in the circuit shown in **Fig. 3**.

_____

_____

_____ [2]

(iv) Explain how the value of component **K** can be adjusted and how this will affect the operation of the circuit shown in **Fig. 3**.

_____

_____

_____

_____ [3]

(v) Name the electronic component represented by the symbol labelled **H** and explain its function in the circuit shown in **Fig. 3**.

_____

_____

_____

_____ [3]

(c) **Fig. 4** shows a circuit containing three fixed resistors.

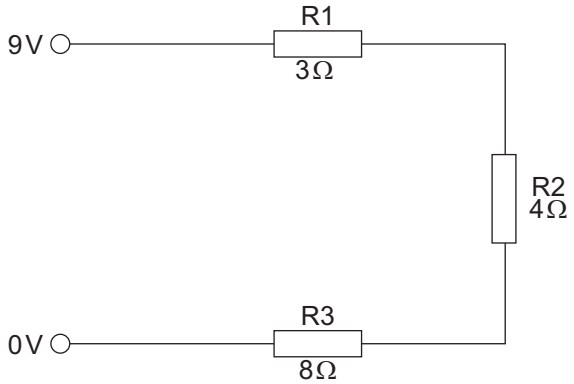

Source: CCEA

Fig. 4

(i) Calculate the current flowing in the circuit shown in **Fig. 4**.

Candidates need to show their working out in the space below.

Answer _____ [4]

[Turn over

Fig. 5 shows a circuit containing resistors in series and in parallel.

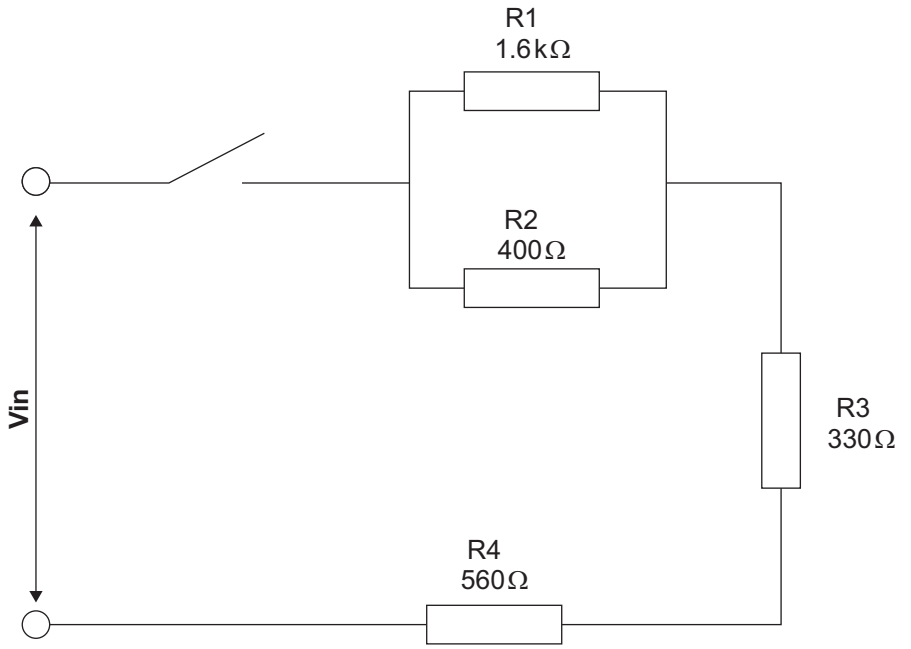

Source: CCEA

Fig. 5

(ii) Calculate the supply voltage for the circuit shown in **Fig. 5** given that the current from the supply is 8 mA.

Candidates need to show their working out in the space below.

Answer _____ [5]

(iii) Explain the term 'nearest preferred value' when using resistors in circuits.

_____

_____

_____ [2]

(iv) State the method used to indicate the value of resistors and briefly explain the term tolerance when dealing with resistors.

_____

_____

_____

_____ [2]

(v) Calculate the highest and lowest values which could be expected from an E12 series resistor with a preferred value of 1.8 kΩ.

Candidates need to show their working out in the space below.

Highest value _____ [2]

Lowest value _____ [2]

[Turn over

(d) Robotics are used in a wide range of applications.

Give **two** examples of the use of robotics in society and discuss the reasons for their use. Identify and explain the basic control systems used to produce robotic movement.

Quality of written communication will be assessed in this question.

[10]

2 **Fig. 6** shows a diagram of a 555 timer integrated circuit in a DIL package.

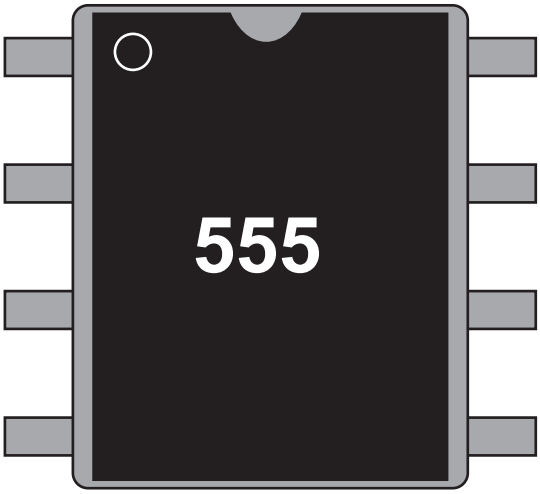

Source: CCEA

Fig. 6

(a) **(i)** **On Fig. 6**, number the pins on the 555 timer using the numbers 1 – 8. [2]

(ii) What do the letters '**DIL**' stand for in relation to an integrated circuit?

_____ [1]

(b) **Fig. 7** below shows the graph of a waveform produced by the output (pin 3) of a 555 timer circuit.

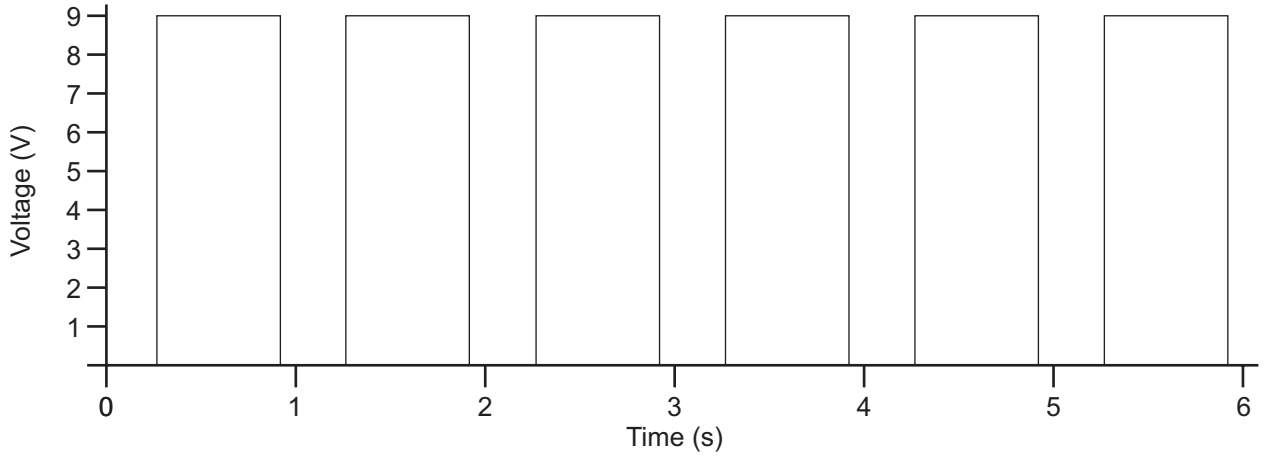

Source: CCEA

Fig. 7

(i) State the type of 555 timer circuit that would produce the wave form shown in **Fig. 7** and give a written explanation to justify your answer.

Type of 555 timer circuit _____ [1]

Explanation _____

_____

_____ [2]

(ii) Draw and label the time period of the waveform on the graph in **Fig. 7**. [1]

[Turn over

(c) **Fig. 8** shows an incomplete 555 timer circuit.

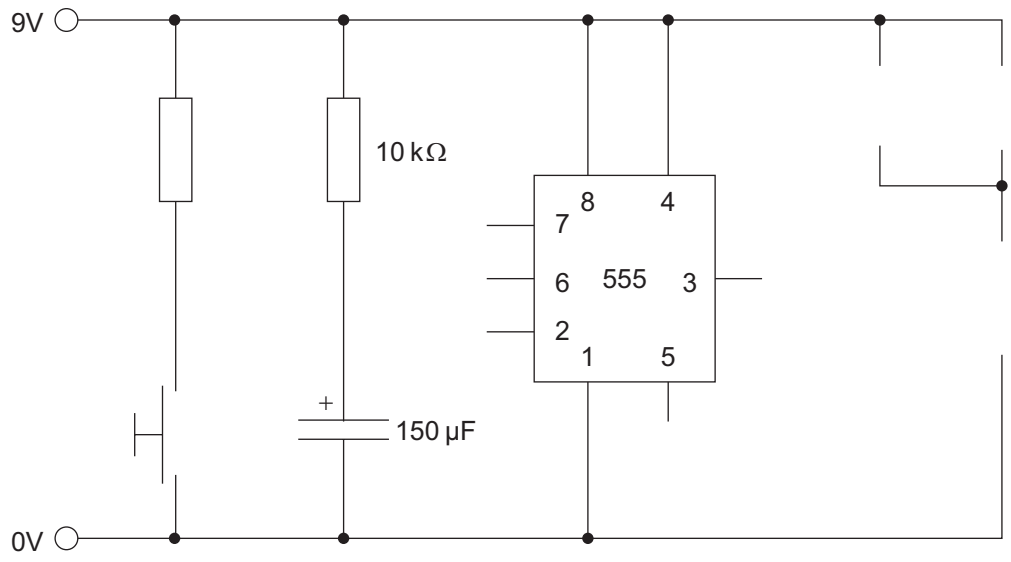

Source: CCEA

Fig. 8

(i) Complete the circuit shown in **Fig. 8** so that it produces a monostable output and uses the output to power a relay with a spring return contact. [8]

(ii) Calculate the time period for the completed 555 monostable timer circuit.

Candidates need to show their working out in the space below.

Answer _____ [3]

(d) Microcontrollers (PICs) are used in a range of projects in education and in industry.

A microcontroller (PIC) with two inputs and one output is shown in **Fig. 9**. It is to be used to control the operation of a mechanical press.

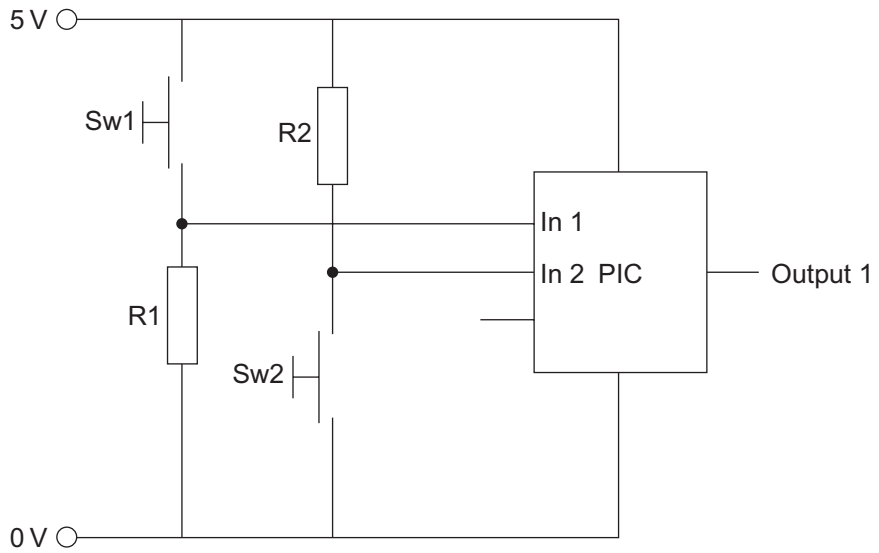

Source: CCEA

Fig. 9

Complete the flowchart in **Fig. 10** to produce a high output from the microcontroller (PIC) in **Fig. 9** when Input 1 is high and Input 2 is low.

Fig. 10

[5]

[Turn over

(e) A prototype of an automated lawnmower is shown in **Fig. 11**. The lawnmower is designed to follow a random pattern and to steer away from obstacles.

The lawnmower has a front bumper which operates a switch when a collision occurs and three motors to control the cutting blade and the independently driven rear wheels.

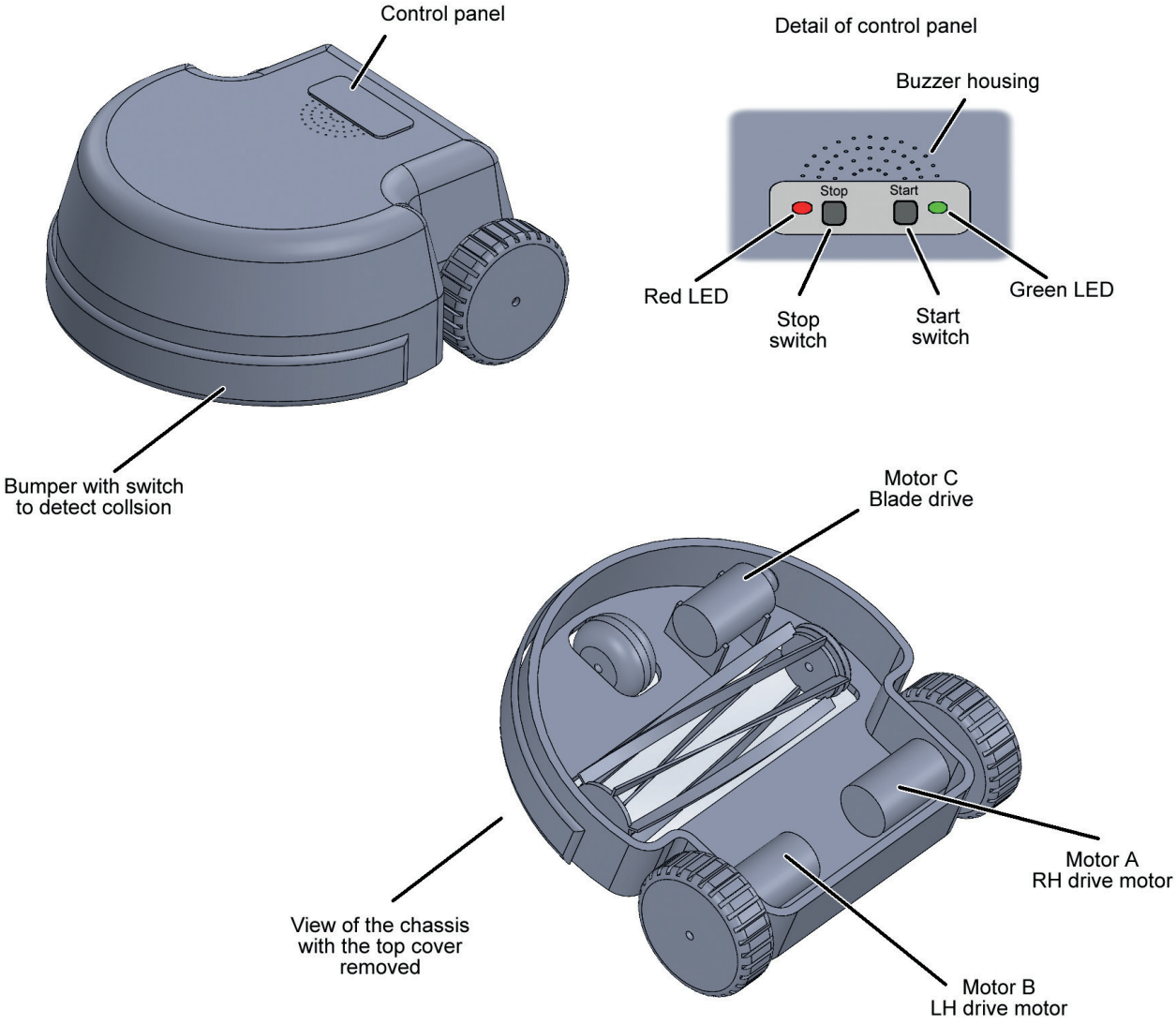

Source: CCEA

Fig. 11

A series of flowcharts is required to represent the operation of the automated lawnmower.

(i) Complete the macro flowchart **BUMPER** in **Fig. 12** as follows:

The mower will sound a buzzer and all motors will stop. Both drive motors will reverse for 5 seconds before stopping. Then the drive motors will rotate in opposite directions for 5 seconds before stopping so that the mower changes direction. The buzzer will then stop.

BUMPER				

Fig. 12

[10]

[Turn over

(ii) Complete the macro flowchart **DRIVE** in **Fig. 13** as follows:

The macro will switch on the blade motor and switch on the drive motors. In the event of a signal from the bumper switch due to a collision, the flow chart will employ the macro **BUMPER** to steer away from obstacles.

DRIVE					

Fig. 13

[5]

(iii) Complete the flowchart **START** in **Fig. 14** as follows:

Initially the red standby LED is on. When the start switch is operated, the red standby LED switches off and the buzzer sounds for 5 seconds followed by the green LED switching on. The **DRIVE** macro is employed to cause the lawnmower to move forward in a straight line. The mower can be stopped by pressing the stop switch which will stop all motors. It will then switch off the green LED and return to standby.

START					

Fig. 14

[12]

THIS IS THE END OF THE QUESTION PAPER

DO NOT WRITE ON THIS PAGE

For Examiner's use only	
Question Number	Marks
1	
2	
Total Marks	

Examiner Number

Permission to reproduce all copyright material has been applied for.
In some cases, efforts to contact copyright holders may have been unsuccessful and CCEA will be happy to rectify any omissions of acknowledgement in future if notified.